MS132SB-2 7,5KW 230/400V B34

Three-phase asynchronous motor in aluminum

Motor type	MS132SB-2 7,5KW 230/400V B34
Brand	BUSCK
Item number	03A21335

Voltage V	Power kW	Frequency Hz	Current A	Speed rpm
230	7,5	50	24,6	2920
400	7,5	50	14,14	2920
460	8,63	60	14,14	3504

Duty	S1
Enclosure	IP55
Insulation class	F
Cooling	IC411 (TEFC)
Max. ambient temp.	40°C
Min. ambient temp.	-20°C
Max. temp. rise	80 K
Max altitude, masl	1000
Torque, Nm	24,53
Starting torque ratio	2
Pull up torque ratio	1,2
Pull out torque ratio	2,2
Starting current ratio	7,5

Efficiency class	EFF2
Efficiency, load 100%	87
Efficiency, load 75%	87
Efficiency, load 50%	85
Power fact, load 100%	0,88
Painting	Standard
Color	RAL 9005
Weight kg	41,3
Sound pressure Lp dB(A)	80
Bearing DE	6308-2Z/C3
Bearing NDE	6208-2Z/C3
Balance grade	Normal
Inertia kgm2	0,013838
Cable entries	2xM25

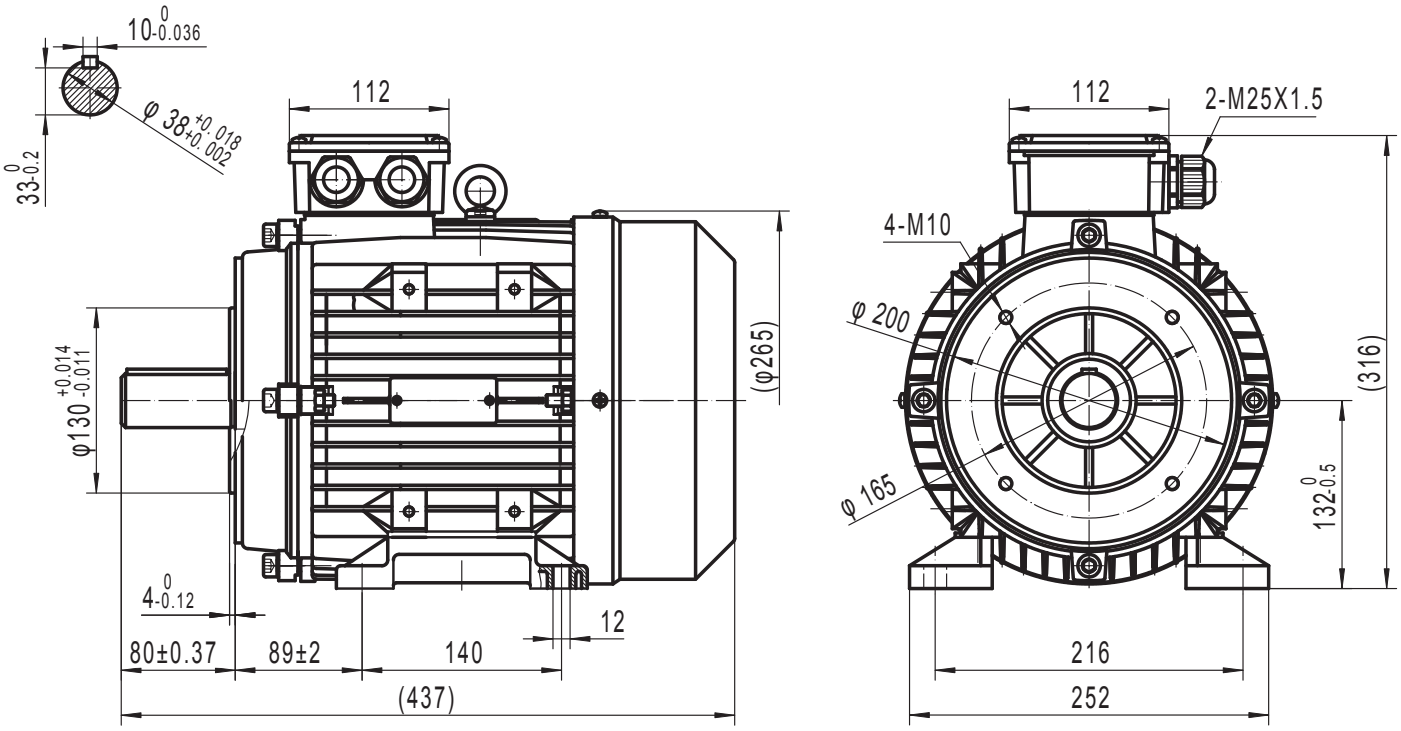

BUSCK
www.busck.eu

Busck & Co AB
Gamla Riksvägen 14
428 32 Göteborg
Sweden
556027-1990
info@busck.se

Busck & Co ApS
Postboks 108
0900 København C
Denmark
info@busck.eu

Busck AS
Skibåsen 35C
4636 Kristiansand
Norway
info@busck.no