MS132SB-2 7,5KW 230/400V B14

Three-phase asynchronous motor in aluminum

Motor type	MS132SB-2 7,5KW 230/400V B14
Brand	BUSCK
Item number	03A21333

Voltage V	Power kW	Frequency Hz	Current A	Speed rpm
230	7,5	50	24,6	2920
400	7,5	50	14,14	2920
460	8,63	60	14,14	3504

Duty	S1	Efficiency class	EFF2
Enclosure	IP55	Efficiency, load 100%	87
Insulation class	F	Efficiency, load 75%	87
Cooling	IC411 (TEFC)	Efficiency, load 50%	85
Max. ambient temp.	40°C	Power fact, load 100%	0,88
Min. ambient temp.	-20°C		
Max. temp. rise	80 K	Painting	Standard
Max altitude, masl	1000	Color	RAL 9005
		Weight kg	41,3
Torque, Nm	24,53	Sound pressure Lp dB(A)	80
Starting torque ratio	2	Bearing DE	6308-2Z/C3
Pull up torque ratio	1,2	Bearing NDE	6208-2Z/C3
Pull out torque ratio	2,2	Balance grade	Normal
Starting current ratio	7,5	Inertia kgm2	0,013838
		Cable entries	2xM25

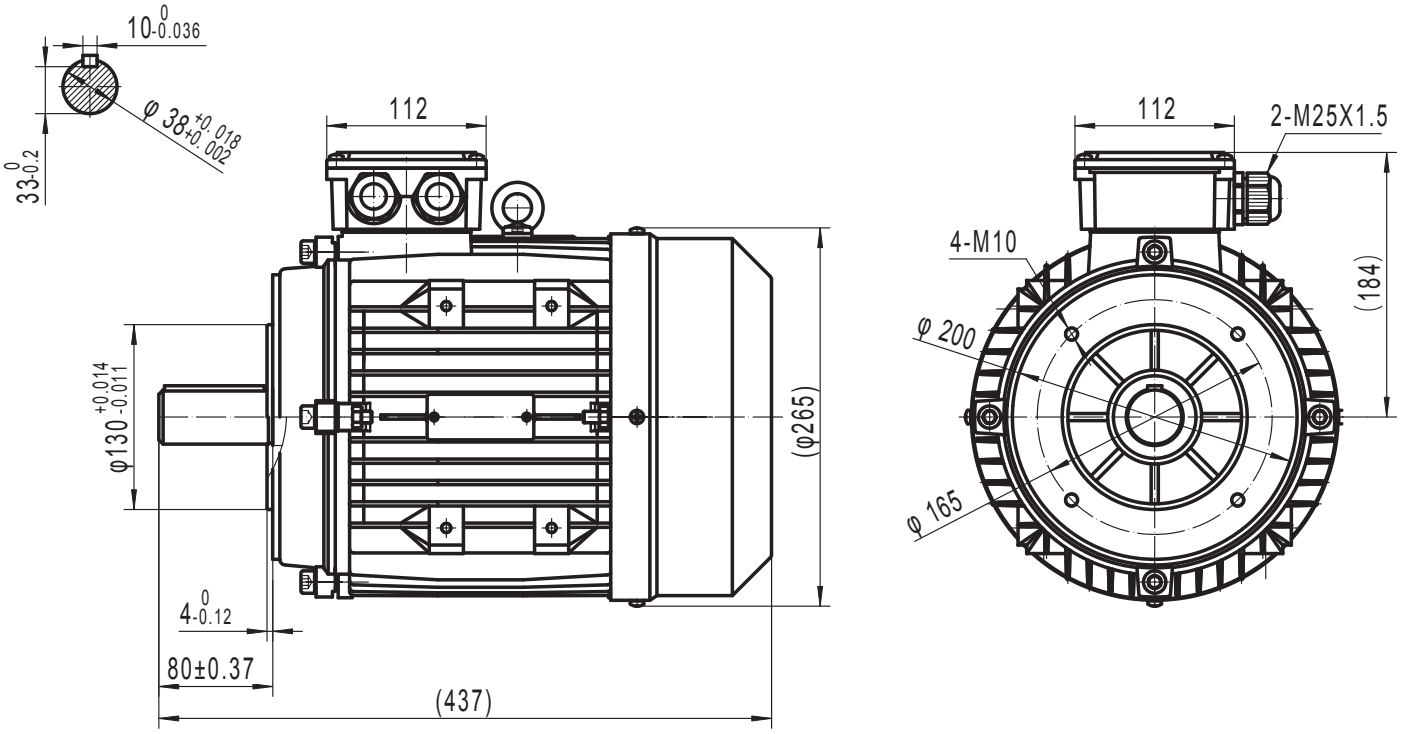

BUSCK
www.busck.eu

Busck & Co AB
Gamla Riksvägen 14
428 32 Göteborg
Sweden
556027-1990
info@busck.se

Busck & Co ApS
Postboks 108
0900 København C
Denmark
info@busck.eu

Busck AS
Skibåsen 35C
4636 Kristiansand
Norway
info@busck.no