MS-132S-8 2,2KW 230/400V B14

Three-phase asynchronous motor in aluminum

Motor type	MS-132S-8 2,2KW 230/400V B14
Brand	BUSCK
Item number	03081323AL

Voltage V	Power kW	Frequency Hz	Current A	Speed rpm
230	2,2	50	9,6	705
400	2,2	50	5,52	705
460	2,53	60	5,52	846

Duty	S1	Efficiency class	IE1
Enclosure	IP55	Efficiency, load 100%	78,8
Insulation class	F	Efficiency, load 75%	80,7
Cooling	IC411 (TEFC)	Efficiency, load 50%	79,6
Max. ambient temp.	40°C	Power fact, load 100%	0,73
Min. ambient temp.	-20°C		
Max. temp. rise	80 K	Painting	Standard
Max altitude, masl	1000	Color	RAL 9005
		Weight kg	34,2
Torque, Nm	29,8	Sound pressure Lp dB(A)	64
Starting torque ratio	1,8	Bearing DE	6308-2Z/C3
Pull up torque ratio	1,65	Bearing NDE	6208-2Z/C3
Pull out torque ratio	2,25	Balance grade	Normal
Starting current ratio	4,5	Inertia kgm2	0,028992
		Cable entries	2xM25

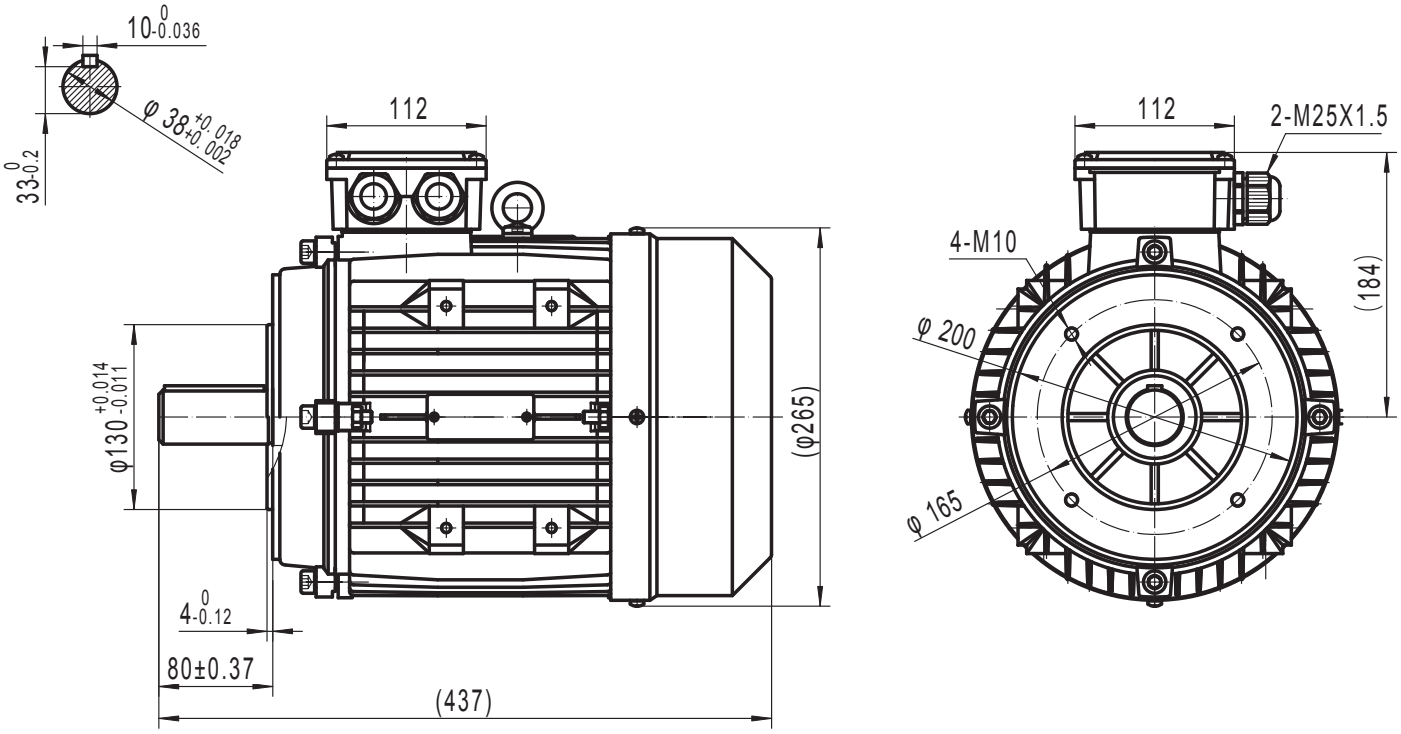

BUSCK
www.busck.eu

Busck & Co AB
Gamla Riksvägen 14
428 32 Göteborg
Sweden
556027-1990
info@busck.se

Busck & Co ApS
Postboks 108
0900 København C
Denmark
info@busck.eu

Busck AS
Skibåsen 35C
4636 Kristiansand
Norway
info@busck.no