MS80A-8 0,18KW 230/400V B35

Three-phase asynchronous motor in aluminum

Motor type	MS80A-8 0,18KW 230/400V B35
Brand	BUSCK
Item number	03080804

Voltage V	Power kW	Frequency Hz	Current A	Speed rpm
230	0,18	50	1,18	705
400	0,18	50	0,68	705
460	0,21	60	0,68	846

Duty	S1	Efficiency class	IE1
Enclosure	IP55	Efficiency, load 100%	64,4
Insulation class	F	Efficiency, load 75%	61,3
Cooling	IC411 (TEFC)	Efficiency, load 50%	53,9
Max. ambient temp.	40°C	Power fact, load 100%	0,59
Min. ambient temp.	-20°C		
Max. temp. rise	80 K	Painting	Standard
Max altitude, masl	1000	Color	RAL 9005
		Weight kg	9,4
Torque, Nm	2,53	Sound pressure Lp dB(A)	52
Starting torque ratio	2,2	Bearing DE	6204-2Z/C3
Pull up torque ratio	2	Bearing NDE	6204-2Z/C3
Pull out torque ratio	2,65	Balance grade	Normal
Starting current ratio	3,6	Inertia kgm2	0,002098
		Cable entries	1xM20

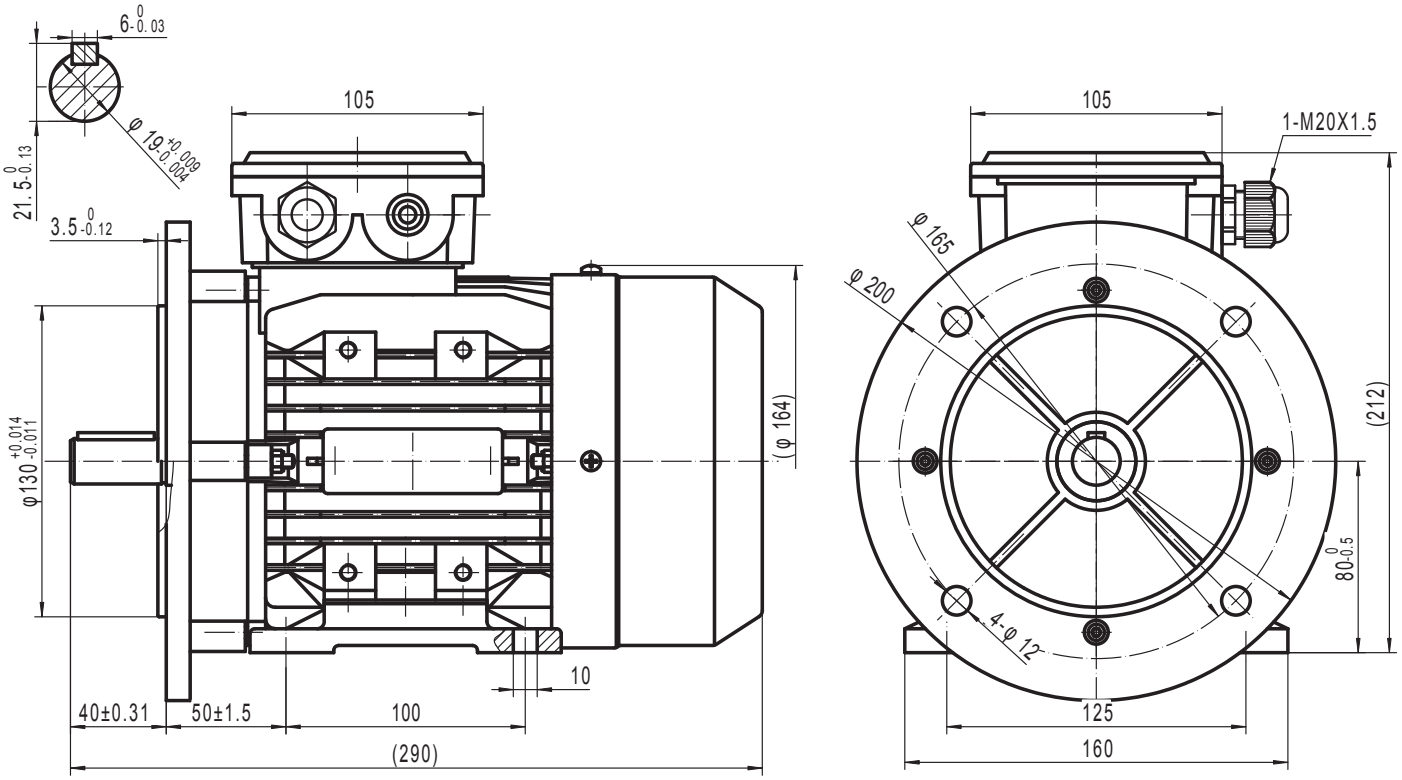

BUSCK
www.busck.eu

Busck & Co AB
Gamla Riksvägen 14
428 32 Göteborg
Sweden
556027-1990
info@busck.se

Busck & Co ApS
Postboks 108
0900 København C
Denmark
info@busck.eu

Busck AS
Skibåsen 35C
4636 Kristiansand
Norway
info@busck.no