T1C180L-6 15KW 400/690V B5

Three-phase asynchronous motor in cast iron

Motor type	T1C180L-6 15KW 400/690V B5
Brand	BUSCK
Item number	03061802tc

Voltage V	Power kW	Frequency Hz	Current A	Speed rpm
400	15	50	31,7	960
690	15	50	18,2	960
460	17,25	60	31,7	1152

Duty	S1
Enclosure	IP55
Insulation class	F
Cooling	IC411 (TEFC)
Max. ambient temp.	40°C
Min. ambient temp.	-20°C
Max. temp. rise	80 K
Max altitude, masl	1000
Torque, Nm	149,22
Starting torque ratio	2,3
Pull up torque ratio	1,5
Pull out torque ratio	2,5
Starting current ratio	7,5

Efficiency, load 100%	87,7
Efficiency, load 75%	89,1
Efficiency, load 50%	87,8
Power fact, load 100%	0,78
Painting	Standard
Color	RAL 9005
Weight kg	161,5
Sound pressure Lp dB(A)	73
Bearing DE	6311 C3
Bearing NDE	6311 C3
Balance grade	Normal
Inertia kgm2	0,24936
Cable entries	2xM32, 1xM16

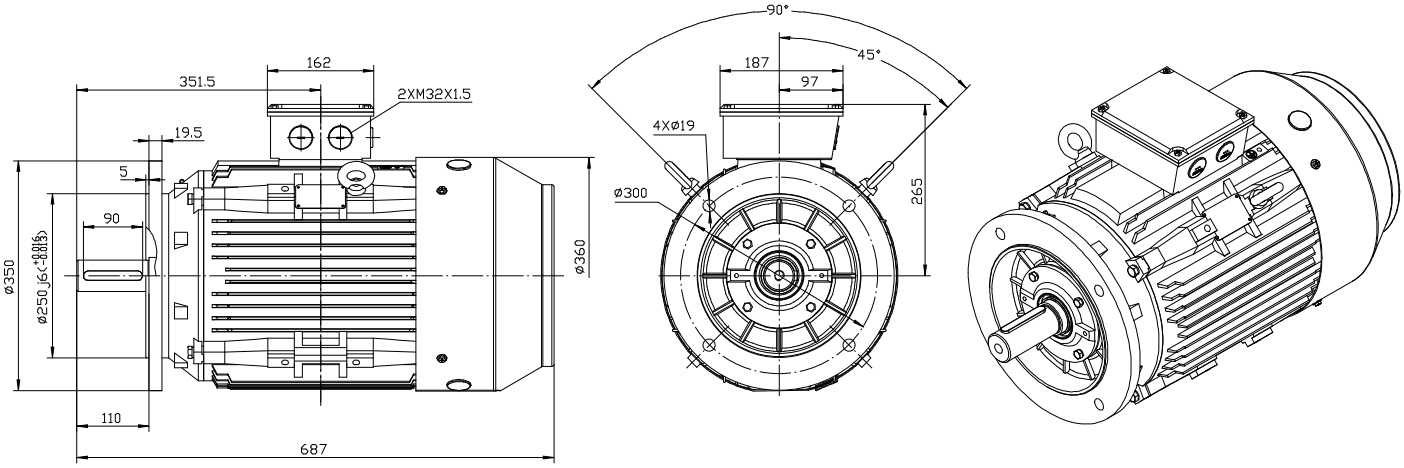

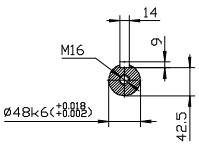

TC 180M B5

BUSCK
www.busck.eu

Busck & Co AB
Gamla Riksvägen 14
428 32 Göteborg
Sweden
556027-1990
info@busck.se

Busck & Co ApS
Postboks 108
0900 København C
Denmark
info@busck.eu

Busck AS
Skibåsen 35C
4636 Kristiansand
Norway
info@busck.no