# MS112M-4 4,6KW 400/690V S3 B5

## Three-phase asynchronous motor in aluminum

| | |
|---|---|
| Motor type | MS112M-4 4,6KW 400/690V S3 B5 |
| Brand | BUSCK |
| Item number | 03041122i |

| Voltage V | Power kW | Frequency Hz | Current A | Speed rpm |
|---|---|---|---|---|

| | | | |
|---|---|---|---|
| Duty | S3-40% / S6-60% | | |
| Enclosure | IP55 | | |
| Insulation class | F | Painting | Standard |
| Cooling | IC411 (TEFC) | Color | RAL 9005 |
| Max. ambient temp. | 40°C | Weight kg | 29 |
| Min. ambient temp. | -20°C | Bearing DE | 6306-2Z/C3 |
| Max. temp. rise | 80 K | Bearing NDE | 6206-2Z/C3 |
| Max altitude, masl | 1000 | Balance grade | Normal |
| | | Cable entries | 2xM25 |

Note S3-40% / S6-60%

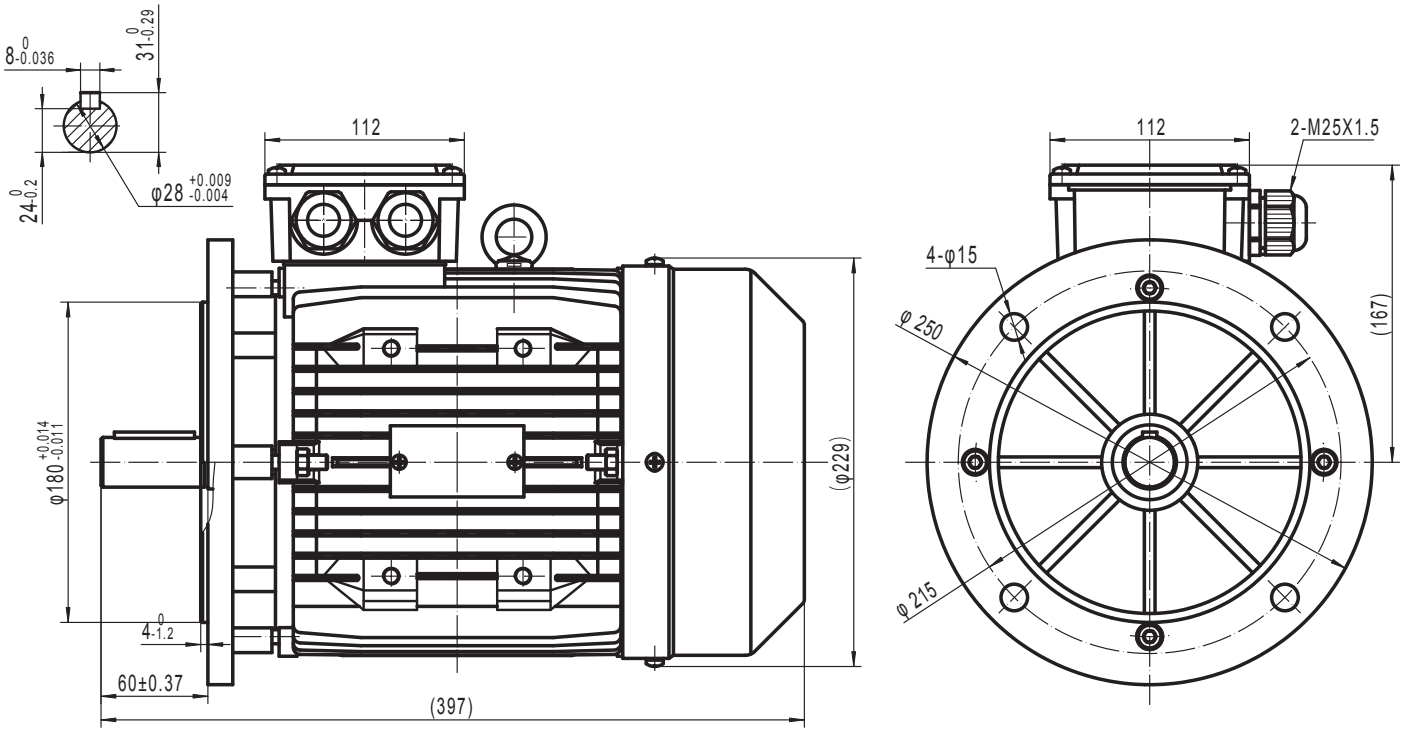



BUSCK
www.busck.eu

Busck & Co AB
Gamla Riksvägen 14
428 32 Göteborg
Sweden
556027-1990
info@busck.se

Busck & Co ApS
Postboks 108
0900 København C
Denmark
info@busck.eu

Busck AS
Skibåsen 35C
4636 Kristiansand
Norway
info@busck.no